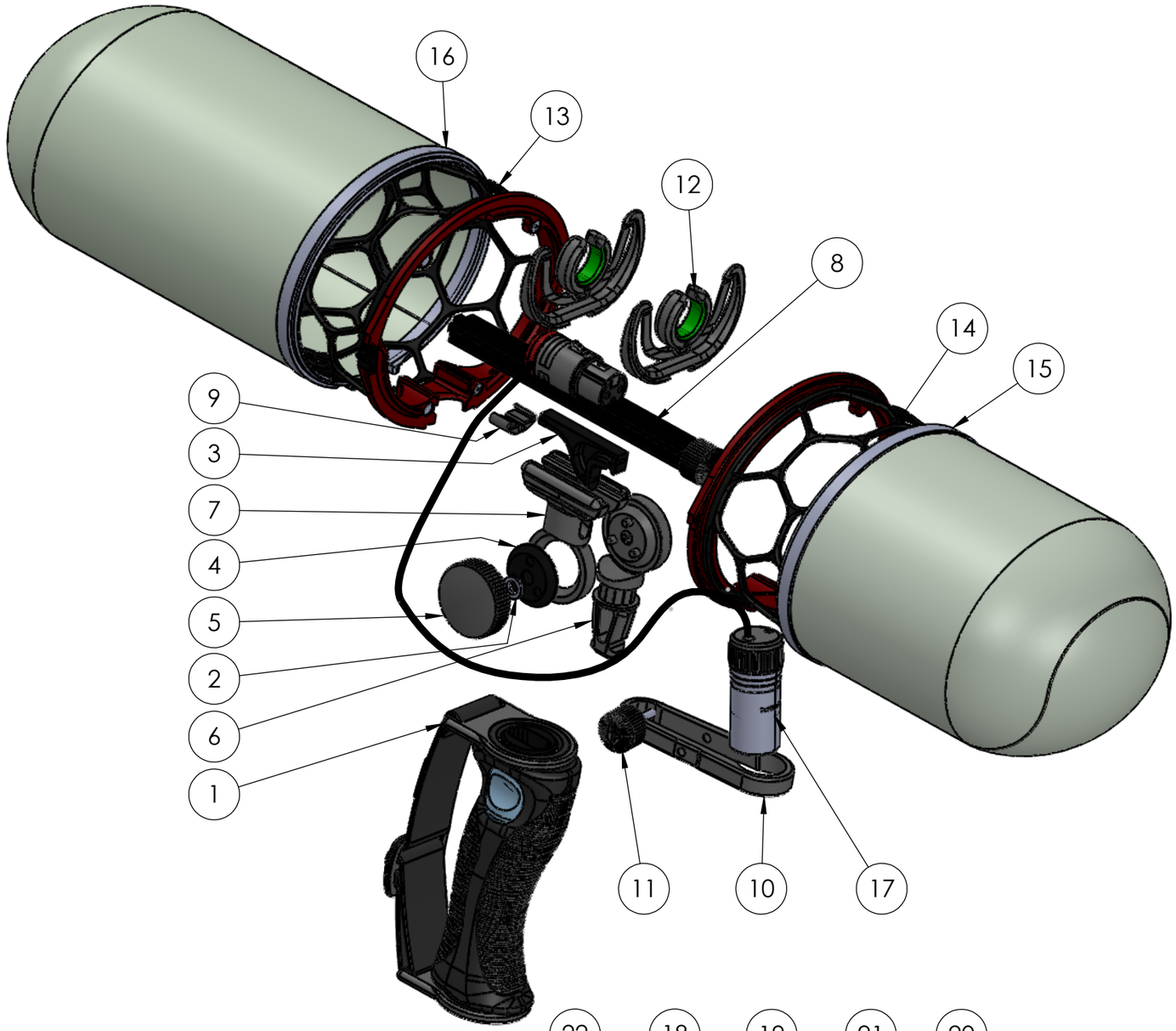

ITEM NO.	PART NUMBER	DESCRIPTION	QTY.
1	RSHANDLE-NANOSH	PCS HANDLE FOR NANO SHIELD	1
2	RS1008380000VR	5.2 x 9.1mm M5 NYLON WASHERS	1
3	RS-MOD2-CD	CABLE DECOUPLING	1
4	RS-MOD2-JL	JOINT LOCK	1
5	RS-MOD2-JS	JOINT KNURLED HEAD SCREW	1
6	RS-MOD2-PTB	PCS TIP BASE	1
7	RS-MOD2-SA	SWIVEL ARM	1
8	RSSUSP-NANO-120	NANO SHIELD SUSPENSION 120mm	1
9	RS-MOD2-CC	CABLE CLAMP	1
10	RS-MOD2-XLRH	XLR HOLDER	1
11	RS-MOD2-XLRHS	XLR HOLDER SCREW	1
12	RSLY-NANOS62-17	NANOSHIELD LYRE 62 SHORE 17-21	2
13	RS-MOD2-B-C	BASKET C	1
14	RS-MOD2-B-B	BASKET B	1
15	RSTEX-NANO-WS-B	SIZE B NANO WINDSHIELD COVER	1
16	RSTEX-NANO-WS-C	SIZE C NANO WINDSHIELD COVER	1
17	RS-CABLE XLR-LN	NANO-SHIELD-XLR CABLE 80Hz L	1
OPTIONS PACK			
18	RSLY-NANOS68-17	NANOSHIELD LYRE 68 SHORE 17-21	2
19	RSLY-NANOS62-22	NANOSHIELD LYRE 62 SHORE 22-25	2
20	RS-MOD2-38TB	3/8"- TIP BASE	1
21	RS-MOD2-CC3	CABLE CLAMP 3mm	1
22	RS-CABLE-XLR3-D	NANO-SHIELD CABLE XLR3 DIGITAL	1

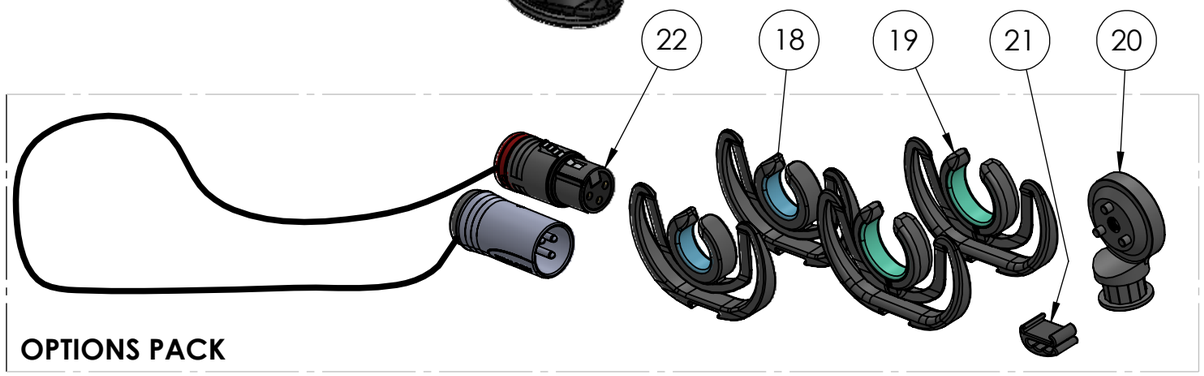

NO	SUBJECT	DATE	DRAWN
1	RELEASE FOR PRODUCTION	03.01.2025	IC

	NAME
DRAWN	IC
CHK'D	JS

Rycote®

PROJECT: NANOSHIELD

COLOUR:

DATE 03.01.2025

DESCRIPTION: NANO-SHIELD KIT NS3-CB

DRAWING: SPARE-PART-DIAGRAM RYCOTE-RYC086303-20250103

A3

SCALE:1:5

SHEET 1 OF 1