Product Information Sheet

D-SUB-9-PIN-METAL-COVER-LOW-PROFILE

44-058 D-SUB-9-pin-metal-cover-low-profile

FEATURES

- Available in sizes 9-15-25-37-50
- Suitable for any common Sub-D connector
- Re-openable
- Compression Inserts in Thermoplastic Compound





TECHNICAL SPECIFICATION

Material:	Zinc, Nickel Plated
Operating temperature:	-25°C to +90°C
Cable entry:	90° Entry
Thumbscrews:	UNC 4-40
Cable diameter:	Up to 18.4 mm
Type of grommets:	Compression Inserts

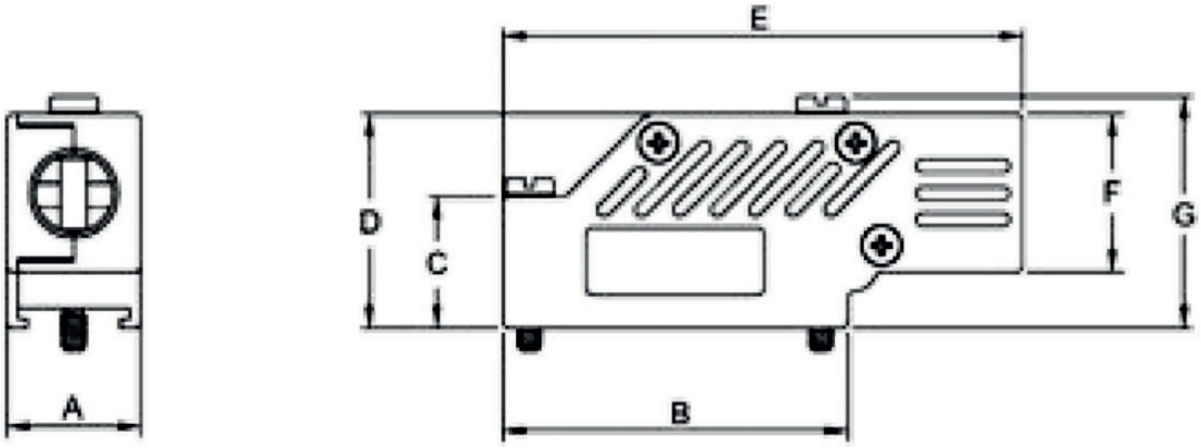

Size	A	B	C	D	E	F	G
9-way	15.0	30.8	15.0	24.4	50.8	18.0	26.2