For ø11.3 mm cables, with cable guide

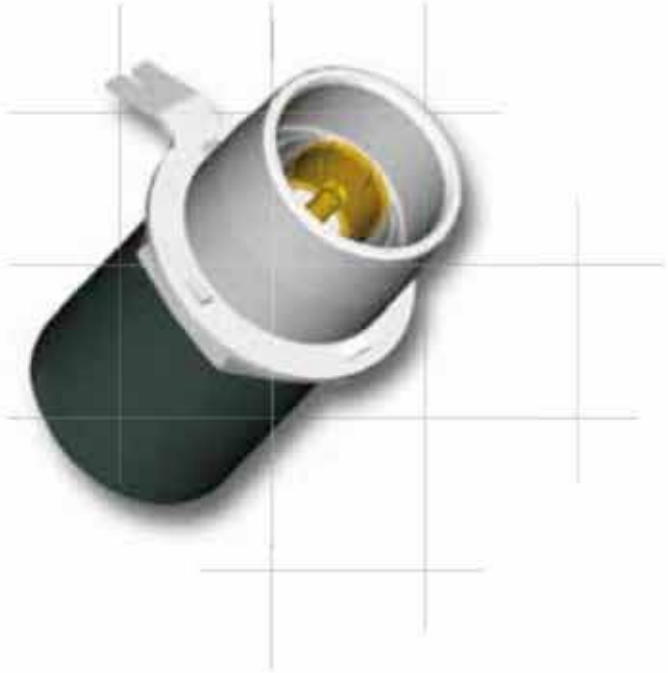

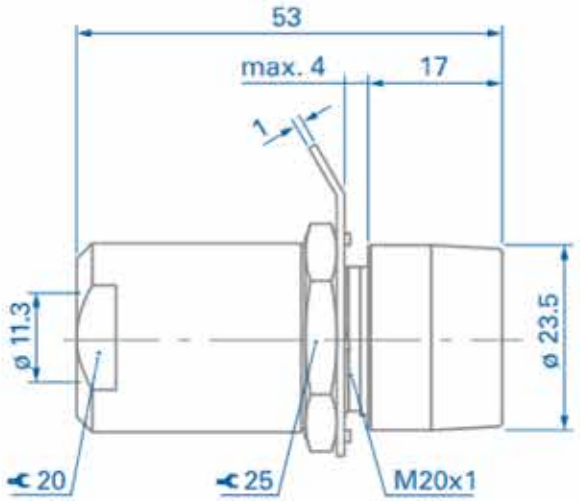

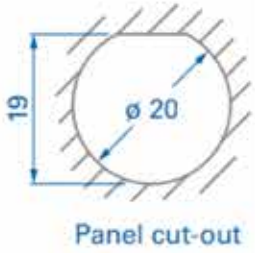

Receptacle part number
DB 1051 A004-3 1.4/6.6

25mm A/F spanner for the hex nut that secures the connector to the panel.
20mm A/F spanner for the back cable cover.
Conductor and screens soldered.